Cambridge International AS & A Level

Cambridge International Examinations
Cambridge International Advanced Subsidiary and Advanced Level

CANDIDATE NAME

CENTRE NUMBER | | | | | |

CANDIDATE NUMBER | | | | |

7280320988

PHYSICS **9702/41**

Paper 4 A Level Structured Questions **May/June 2017**

2 hours

Candidates answer on the Question Paper.

No Additional Materials are required.

READ THESE INSTRUCTIONS FIRST

Write your Centre number, candidate number and name on all the work you hand in.
Write in dark blue or black pen.
You may use an HB pencil for any diagrams or graphs.
Do not use staples, paper clips, glue or correction fluid.
DO **NOT** WRITE IN ANY BARCODES.

Answer **all** questions.

Electronic calculators may be used.
You may lose marks if you do not show your working or if you do not use appropriate units.

At the end of the examination, fasten all your work securely together.
The number of marks is given in brackets [ ] at the end of each question or part question.

This document consists of **22** printed pages and **2** blank pages.

DC (LK/FD) 127087/2
© UCLES 2017

CAMBRIDGE International Examinations

Data

speed of light in free space	$c = 3.00 \times 10^{8}\,\text{m s}^{-1}$
permeability of free space	$\mu_0 = 4\pi \times 10^{-7}\,\text{H m}^{-1}$
permittivity of free space	$\varepsilon_0 = 8.85 \times 10^{-12}\,\text{F m}^{-1}$
	$\left(\frac{1}{4\pi\varepsilon_0} = 8.99 \times 10^{9}\,\text{m F}^{-1}\right)$
elementary charge	$e = 1.60 \times 10^{-19}\,\text{C}$
the Planck constant	$h = 6.63 \times 10^{-34}\,\text{J s}$
unified atomic mass unit	$1\,\text{u} = 1.66 \times 10^{-27}\,\text{kg}$
rest mass of electron	$m_e = 9.11 \times 10^{-31}\,\text{kg}$
rest mass of proton	$m_p = 1.67 \times 10^{-27}\,\text{kg}$
molar gas constant	$R = 8.31\,\text{J K}^{-1}\,\text{mol}^{-1}$
the Avogadro constant	$N_A = 6.02 \times 10^{23}\,\text{mol}^{-1}$
the Boltzmann constant	$k = 1.38 \times 10^{-23}\,\text{J K}^{-1}$
gravitational constant	$G = 6.67 \times 10^{-11}\,\text{N m}^2\,\text{kg}^{-2}$
acceleration of free fall	$g = 9.81\,\text{m s}^{-2}$

© UCLES 2017

Formulae

uniformly accelerated motion	$s = ut + \frac{1}{2}at^2$ $v^2 = u^2 + 2as$
work done on/by a gas	$W = p\Delta V$
gravitational potential	$\phi = -\frac{Gm}{r}$
hydrostatic pressure	$p = \rho gh$
pressure of an ideal gas	$p = \frac{1}{3}\frac{Nm}{V}\langle c^2 \rangle$
simple harmonic motion	$a = -\omega^2 x$
velocity of particle in s.h.m.	$v = v_0 \cos \omega t$ $v = \pm \omega \sqrt{(x_0^2 - x^2)}$
Doppler effect	$f_o = \frac{f_s v}{v \pm v_s}$
electric potential	$V = \frac{Q}{4\pi\varepsilon_0 r}$
capacitors in series	$1/C = 1/C_1 + 1/C_2 + \ldots$
capacitors in parallel	$C = C_1 + C_2 + \ldots$
energy of charged capacitor	$W = \frac{1}{2}QV$
electric current	$I = Anvq$
resistors in series	$R = R_1 + R_2 + \ldots$
resistors in parallel	$1/R = 1/R_1 + 1/R_2 + \ldots$
Hall voltage	$V_H = \frac{BI}{ntq}$
alternating current/voltage	$x = x_0 \sin \omega t$
radioactive decay	$x = x_0 \exp(-\lambda t)$
decay constant	$\lambda = \frac{0.693}{t_{\frac{1}{2}}}$

© UCLES 2017

[Turn over

Answer **all** the questions in the spaces provided.

1 **(a)** Explain how a satellite may be in a circular orbit around a planet.

.....

.....

.....[2]

(b) The Earth and the Moon may be considered to be uniform spheres that are isolated in space. The Earth has radius R and mean density ρ. The Moon, mass m, is in a circular orbit about the Earth with radius nR, as illustrated in Fig. 1.1.

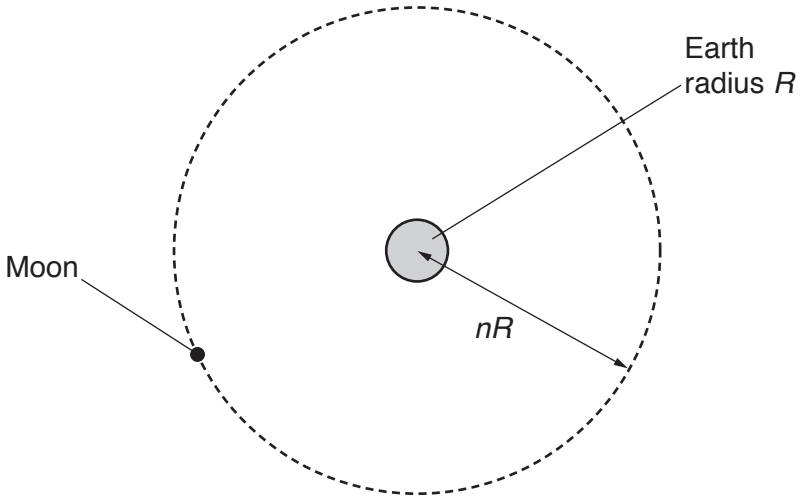

Fig. 1.1

The Moon makes one complete orbit of the Earth in time T.
Show that the mean density ρ of the Earth is given by the expression

$$\rho = \frac{3\pi n^3}{GT^2}.$$

[4]

(c) The radius R of the Earth is 6.38×10^3 km and the distance between the centre of the Earth and the centre of the Moon is 3.84×10^5 km.
The period T of the orbit of the Moon about the Earth is 27.3 days.
Use the expression in **(b)** to calculate ρ.

ρ = ... kg m^{-3} [3]

[Total: 9]

© UCLES 2017

[Turn over

2 A bar magnet of mass 180 g is suspended from the free end of a spring, as illustrated in Fig. 2.1.

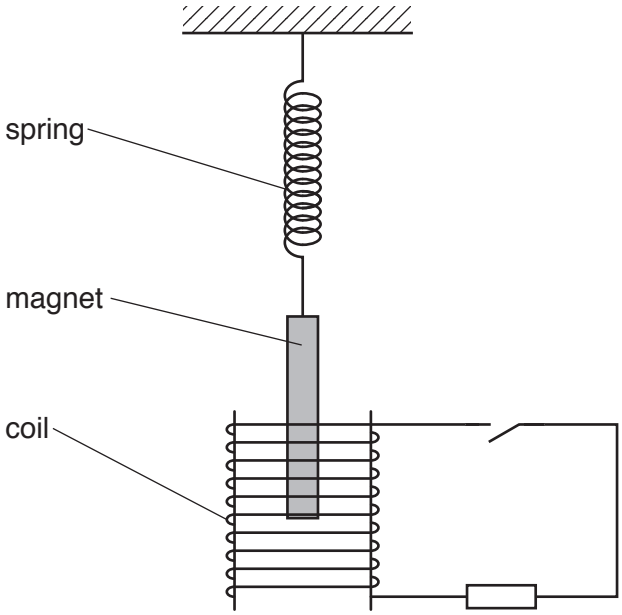

Fig. 2.1

The magnet hangs so that one pole is near the centre of a coil of wire.

The coil is connected in series with a resistor and a switch. The switch is open.

The magnet is displaced vertically and then allowed to oscillate with one pole remaining inside the coil. The other pole remains outside the coil.

At time $t = 0$, the magnet is oscillating freely as it passes through its equilibrium position. At time $t = 3.0$ s, the switch in the circuit is closed.

The variation with time t of the vertical displacement y of the magnet is shown in Fig. 2.2.

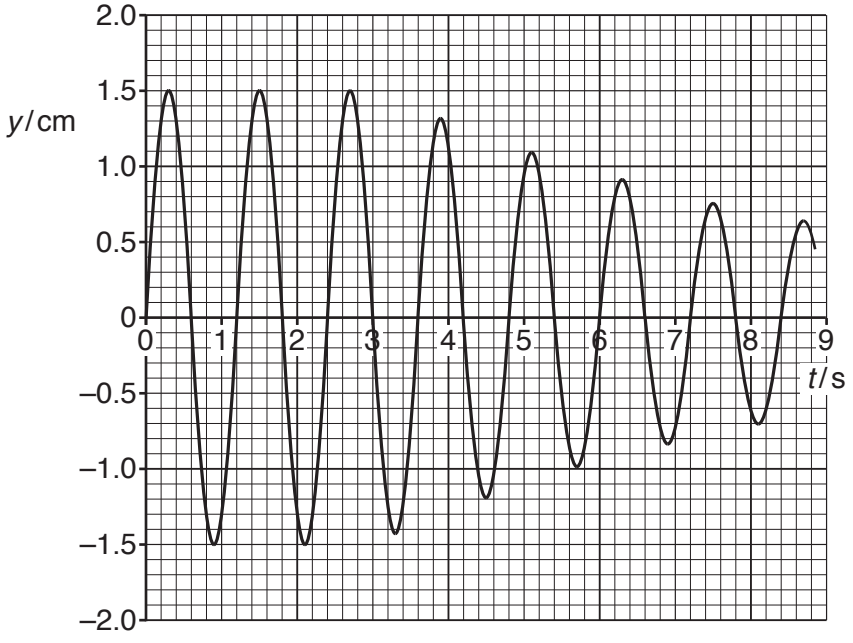

Fig. 2.2

© UCLES 2017

(a) Determine, to two significant figures, the frequency of oscillation of the magnet.

frequency = ... Hz [2]

(b) State whether the closing of the switch gives rise to light, heavy or critical damping.

.....[1]

(c) Calculate the change in the energy ΔE of oscillation of the magnet between time $t = 2.7\,\text{s}$ and time $t = 7.5\,\text{s}$. Explain your working.

ΔE = ... J [6]

[Total: 9]

© UCLES 2017

3 The digital transmission of speech may be illustrated using the block diagram of Fig. 3.1.

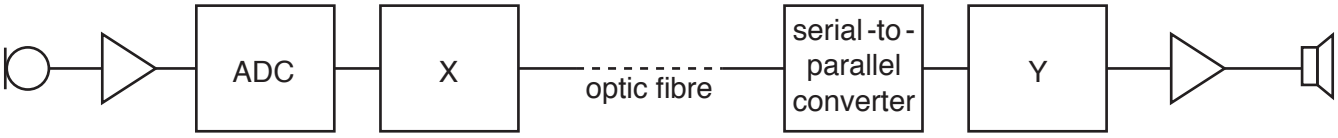

Fig. 3.1

(a) **(i)** State what is meant by a *digital signal*.

.....

.....[1]

(ii) State the names of the components labelled X and Y on Fig. 3.1.

X: .....

Y: .....
[2]

(iii) Describe the function of the ADC.

.....

.....

.....[2]

(b) The optic fibre has length 84 km and the attenuation per unit length in the fibre is 0.19 dB km^{-1}.

The input power to the optic fibre is 9.7 mW. At the output from the optic fibre, the signal-to-noise ratio is 28 dB.

Calculate

(i) in dB, the ratio

$$\frac{\text{input power to optic fibre}}{\text{noise power at output of optic fibre}},$$

ratio = ... dB [2]

(ii) the noise power at the output of the optic fibre.

noise power = ... W [3]

[Total: 10]

4 **(a)** Describe the motion of molecules in a gas, according to the kinetic theory of gases.

.....

.....

.....[2]

(b) Describe what is observed when viewing Brownian motion that provides evidence for your answer in **(a)**.

.....

.....

.....[2]

(c) At a pressure of 1.05×10^5 Pa and a temperature of 27 °C, 1.00 mol of helium gas has a volume of 0.0240 m^3.
The mass of 1.00 mol of helium gas, assumed to be an ideal gas, is 4.00 g.

(i) Calculate the root-mean-square (r.m.s.) speed of an atom of helium gas for a temperature of 27 °C.

r.m.s. speed = ... $m\,s^{-1}$ [3]

(ii) Using your answer in **(i)**, calculate the r.m.s. speed of the atoms at 177 °C.

r.m.s. speed = ... $m\,s^{-1}$ [3]

[Total: 10]

© UCLES 2017

5 An α-particle is travelling in a vacuum towards the centre of a gold nucleus, as illustrated in Fig. 5.1.



Fig. 5.1

The gold nucleus has charge $79e$.
The gold nucleus and the α-particle may be assumed to behave as point charges.
At a large distance from the gold nucleus, the α-particle has energy 7.7×10^{-13} J.

(a) The α-particle does not collide with the gold nucleus. Show that the radius of the gold nucleus must be less than 4.7×10^{-14} m.

[3]

(b) Determine the acceleration of the α-particle for a separation of 4.7×10^{-14} m between the centres of the gold nucleus and of the α-particle.

acceleration = ... $m\,s^{-2}$ [3]

(c) In an α-particle scattering experiment, the beam of α-particles is incident on a very thin gold foil.
Suggest why the gold foil must be very thin.

.....

.....[1]

[Total: 7]

© UCLES 2017

[Turn over

6 A comparator circuit is designed to switch on a mains lamp when the ambient light level reaches a set value.
An incomplete diagram of the circuit is shown in Fig. 6.1.

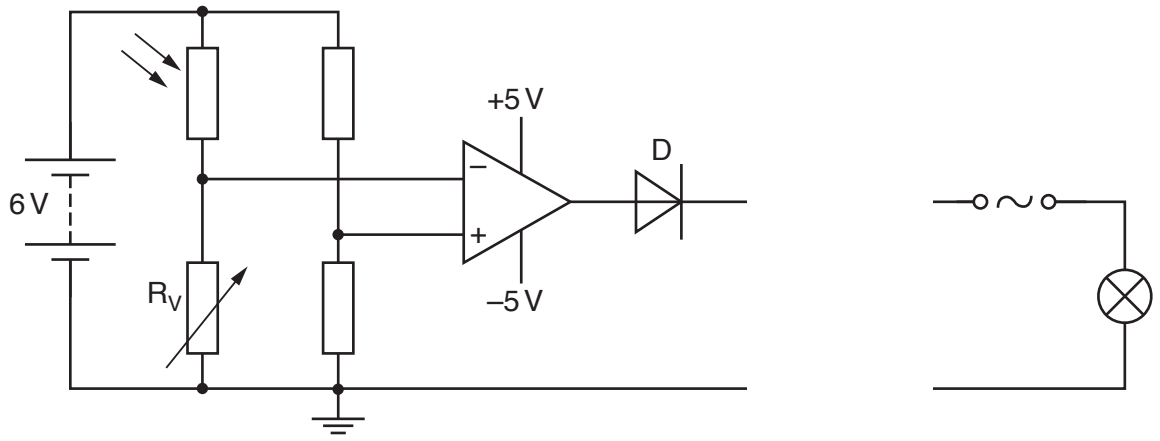

Fig. 6.1

(a) **(i)** A relay is required as part of the output device. This is not shown in Fig. 6.1. Explain why a relay is required.

.....

.....

.....[2]

(ii) On Fig. 6.1, draw the symbol for a relay connected in the circuit as part of the output device. [2]

(b) Describe the function of

(i) the variable resistor R_V,

.....

.....[1]

(ii) the diode D.

.....

.....[1]

© UCLES 2017

(c) State whether the lamp will switch on as the light level increases or as it decreases. Explain your answer.

.....

.....

.....

.....

.....[3]

[Total: 9]

7 An electron having charge $-q$ and mass m is accelerated from rest in a vacuum through a potential difference V.
The electron then enters a region of uniform magnetic field of magnetic flux density B, as shown in Fig. 7.1.

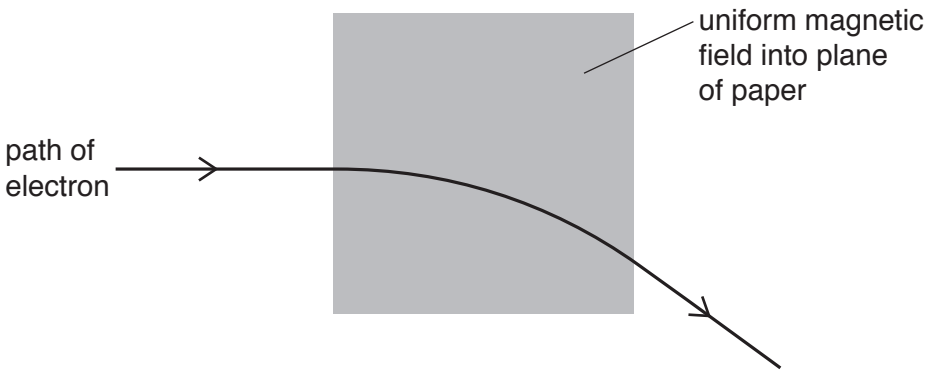

Fig. 7.1

The direction of the uniform magnetic field is into the plane of the paper.
The velocity of the electron as it enters the magnetic field is normal to the magnetic field.
The radius of the circular path of the electron in the magnetic field is r.

(a) Explain why the path of the electron in the magnetic field is the arc of a circle.

.....

.....

.....

.....[3]

(b) Show that the magnitude p of the momentum of the electron as it enters the magnetic field is given by

$$p = \sqrt{(2mqV)}.$$

[2]

© UCLES 2017

(c) The potential difference V is 120 V. The radius r of the circular arc is 7.4 cm.

Determine the magnitude B of the magnetic flux density.

B = ... T [3]

(d) The potential difference V in **(c)** is increased. The magnetic flux density B remains unchanged.

By reference to the momentum of the electron, explain the effect of this increase on the radius r of the path of the electron in the magnetic field.

.....

.....

.....[2]

[Total: 10]

8 Explain the main principles behind the use of nuclear magnetic resonance imaging (NMRI) to obtain information about internal body structures.

.....

.....

.....

.....

.....

.....

.....

.....

.....

.....

.....

.....

.....[8]

[Total: 8]

9 A simple transformer is illustrated in Fig. 9.1.

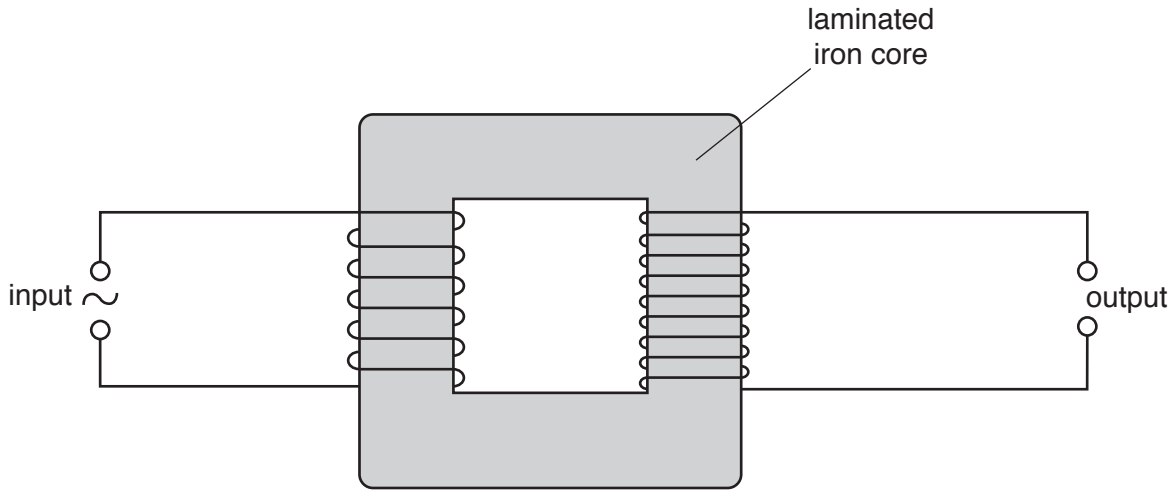

Fig. 9.1

(a) **(i)** State why the transformer has an iron core, rather than having no core.

.....

.....[1]

(ii) Explain why the core is laminated.

.....

.....

.....[2]

(b) By reference to the action of a transformer, explain why the input to the transformer is an alternating voltage, rather than a constant voltage.

.....

.....

.....

.....

.....[3]

[Total: 6]

© UCLES 2017

[Turn over

BLANK PAGE

© UCLES 2017

10 (a) State

(i) what is meant by the *hardness* of an X-ray beam,

.....

.....

.....[2]

(ii) how the hardness of an X-ray beam from an X-ray tube is increased.

.....

.....[1]

(b) The same parallel beam of X-ray radiation is incident, separately, on samples of bone and of muscle.

Data for the thickness x of the samples of bone and of muscle, together with the linear attenuation (absorption) coefficients μ of the radiation in bone and in muscle, are given in Fig. 10.1.

	x/cm	μ/cm^{-1}
bone	1.5	2.9
muscle	4.0	0.95

Fig. 10.1

Determine the ratio

$$\frac{\text{intensity transmitted through bone}}{\text{intensity transmitted through muscle}}.$$

ratio = ... [2]

[Total: 5]

11 A beam of light consists of a continuous range of wavelengths from 420 nm to 740 nm.
The light passes through a cloud of cool gas, as shown in Fig. 11.1.

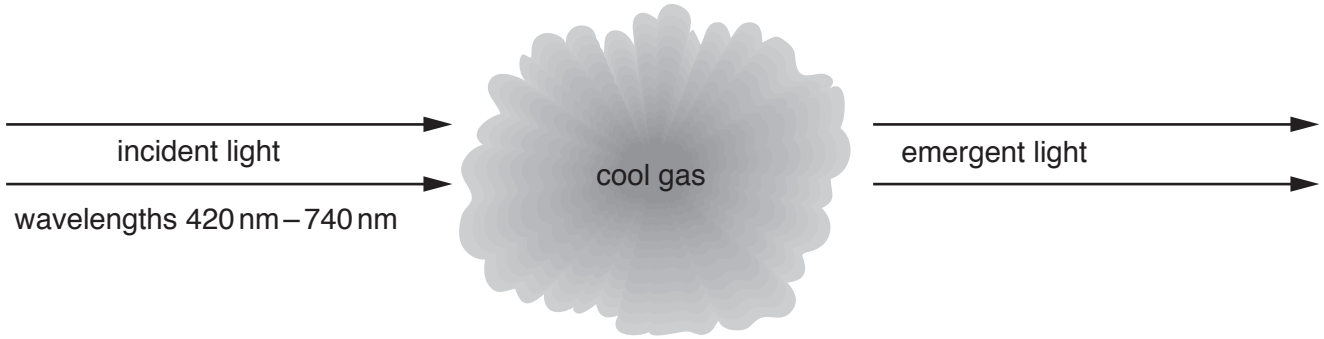

Fig. 11.1

(a) The spectrum of the light emerging from the cloud of cool gas is viewed using a diffraction grating.
Explain why this spectrum contains a number of dark lines.

.....

.....

.....

.....

.....

.....[4]

(b) Some of the electron energy levels of the atoms in the cloud of gas are represented in Fig. 11.2.

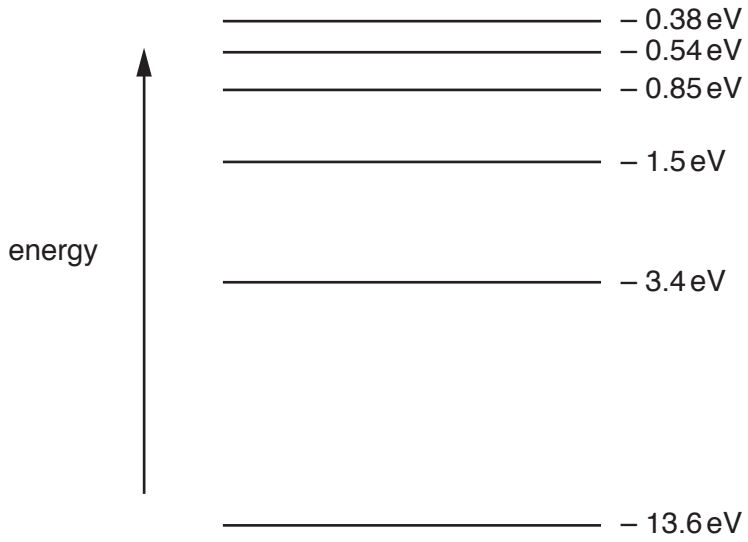

Fig. 11.2 (not to scale)

© UCLES 2017

(i) Light of wavelength 420 nm has a photon energy of 2.96 eV.
Calculate the photon energy, in eV, of light of wavelength 740 nm.

photon energy = ... eV [2]

(ii) Use data from **(i)** and your answer in **(i)** to show, on Fig. 11.2, the changes in energy levels giving rise to the dark lines in **(a)**. [2]

[Total: 8]

12 One possible nuclear reaction that takes place in a nuclear reactor is given by the equation

$$^{235}_{92}\text{U} + ^{1}_{0}\text{n} \longrightarrow ^{95}_{42}\text{Mo} + ^{139}_{57}\text{La} + 2^{1}_{0}\text{n} + x\,^{0}_{-1}\text{e}$$

Data for the nuclei and particles are given in Fig. 12.1.

nucleus or particle	mass / u
$^{235}_{92}\text{U}$	235.123
$^{95}_{42}\text{Mo}$	94.945
$^{139}_{57}\text{La}$	138.955
$^{1}_{0}\text{n}$	1.00863
$^{0}_{-1}\text{e}$	5.49×10^{-4}

Fig. 12.1

(a) Determine, for this nuclear reaction, the value of *x*.

x = ...[1]

© UCLES 2017

(b) **(i)** Show that the energy equivalent to 1.00 u is 934 MeV.

[3]

(ii) Calculate the energy, in MeV, released in this reaction. Give your answer to three significant figures.

energy = ... MeV [3]

(c) Suggest the forms of energy into which the energy calculated in **(b)(ii)** is transformed.

.....

.....

.....

.....[2]

[Total: 9]

© UCLES 2017

BLANK PAGE

Permission to reproduce items where third-party owned material protected by copyright is included has been sought and cleared where possible. Every reasonable effort has been made by the publisher (UCLES) to trace copyright holders, but if any items requiring clearance have unwittingly been included, the publisher will be pleased to make amends at the earliest possible opportunity.

To avoid the issue of disclosure of answer-related information to candidates, all copyright acknowledgements are reproduced online in the Cambridge International Examinations Copyright Acknowledgements Booklet. This is produced for each series of examinations and is freely available to download at www.cie.org.uk after the live examination series.

Cambridge International Examinations is part of the Cambridge Assessment Group. Cambridge Assessment is the brand name of University of Cambridge Local Examinations Syndicate (UCLES), which is itself a department of the University of Cambridge.

© UCLES 2017